4182E

	GC		i304		i316	
	REF.	kg/ud	REF.	kg/ud	REF.	kg/ud
4182E	2/6315	0,25	2/18096	0,24	2/18115	0,24

3 x DIN933 M10X30 (2/17547-i304 / 2/17600-i316) + 3 x TM41 M10 (2/17584-GC / 2/18525-I304 / 2/17612-I316)

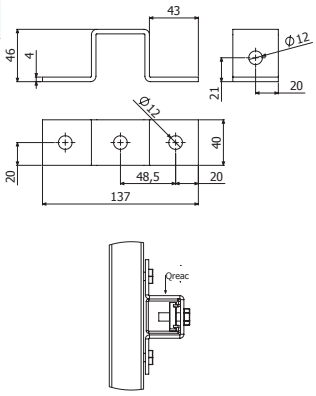

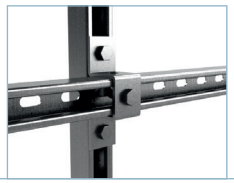

4182F

	GC		i304		i316	
	REF.	kg/ud	REF.	kg/ud	REF.	kg/ud
4182F	2/6316	0,35	2/18097	0,34	2/18116	0,34

DIN933 M10X30 (2/17547-i304 / 2/17600-i316) + TM41 M10 (2/17584-GC / 2/18525-I304 / 2/17612-I316)

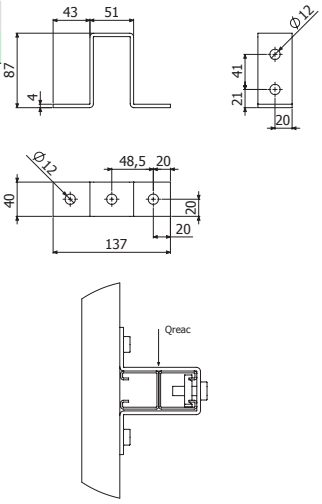

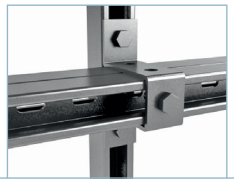

4182G

	GC		i304		i316	
	REF.	kg/ud	REF.	kg/ud	REF.	kg/ud
4182G	2/6317	0,11	2/18098	0,11	2/18117	0,11

2 x DIN933 M10X30 (2/17547-i304 / 2/17600-i316) + 2 x TM41 M10 (2/17584-GC / 2/18525-I304 / 2/17612-I316)
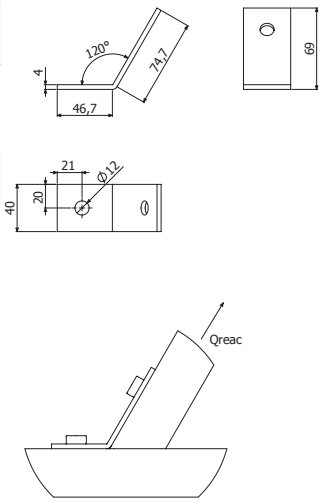
50 x B3 (2/8827-GC / 2/12096-I304 / 2/15575-I316)